Micrometer Heads
SERIES 110 — Differential Screw Thread Translator (Extra-Fine Feed) Type

- Differential movements of spindle threads and units allow extra-fine spindle feeding (0.05 mm/rev), resulting in high-resolution measurements.

SPECIFICATIONS

Metric

Code No.	Range (mm)		Graduation (mm)		Graduation features
110-101	0 - 2.5		0.001		Standard
110-102			0.0001		Fine
110-105-10	0 - 1		0.001		Standard
110-106-10			0.0001		Fine
110-107-10			0.001		Standard
110-108-10			0.0001		Fine
110-502-10	Thimble (fine)	0 - 0.2	Thimble (fine)	0.0005	Dual scales; 0.2 mm fine-feed range
	Thimble (coarse)	0 - 13	Thimble (coarse)	0.01	

Code No.	Stem dia. (mm)	Stem	Spindle end	Maximum permissible error J_{MPE}*2 (μm)
110-101	12	W/clamp nut	Flat (carbide tip)	±5/±1.5
110-102				
110-105-10				±3/±1.5
110-106-10				
110-107-10			Spherical (SR10) (carbide tip)	
110-108-10				
110-502-10	9.5		Spherical	±3/±1.5

Inch

Code No.	Range (in)		Graduation (in)		Graduation features
110-111	0 - 0.05		0.00002		Standard
110-112			0.000005		Fine
110-115-10*1	0 - 0.02		0.00002		Standard
110-116-10*1			0.000005		Fine
110-117-10*1			0.00002		Standard
110-118-10*1			0.000005		Fine
110-504-10	Thimble (fine)	0 - 0.006	Thimble (fine)	0.00002	Dual scales; 0.2 mm/0.006 in fine-feed range
	Thimble (coarse)	0 - 0.5	Thimble (coarse)	0.001	

Code No.	Stem dia. (in)	Stem	Spindle end	Maximum permissible error J_{MPE}*2 (in)
110-111	0.5	W/clamp nut	Flat (carbide tip)	±0.00025/±0.00006
110-112				
110-115-10*1				±0.00015/±0.00006
110-116-10*1				
110-117-10*1			Spherical (SR10) (carbide tip)	
110-118-10*1				
110-504-10	0.375		Spherical	±0.00015/±0.00006

- Measuring face: Material/Carbide tip (**110-502-10/504-10** are alloy tool steel), Hardness/90 HRA or more (Only **110-502-10/504-10** are 60 HRC or more), Lapped
- Scale finishing: Satin-chrome plated

*1 Made-to-order models
*2 Wide range/narrow range
Note: Refer to page 03-49 for details of the recommended maximum loading limit.

Mitutoyo reserves the right to change any or all aspects of any product specification, including prices, designs and service content, without notice.

DIMENSIONS

Unit: mm

- Differential movement mechanism with double spindle.
- Non-rotating spindle.
- Fixture thickness: 9.5 mm

Equipped with vernier scale

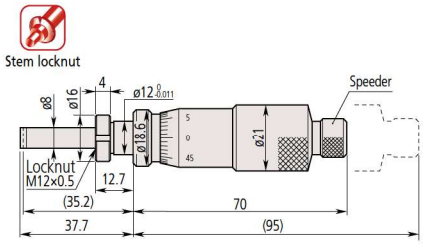

110-101
110-102 Equipped with vernier scale

- Differential movement mechanism with double spindle.
- Non-rotating spindle.
- Fixture thickness: 9.5 mm

Equipped with vernier scale

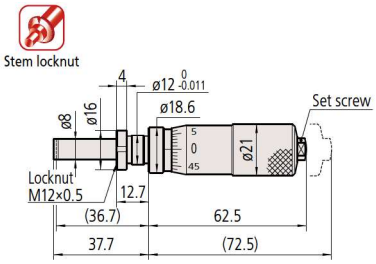

110-105-10
110-106-10 Equipped with vernier scale Mass: 150 g

- Dual thimble
- Fixture thickness: 11.5 mm

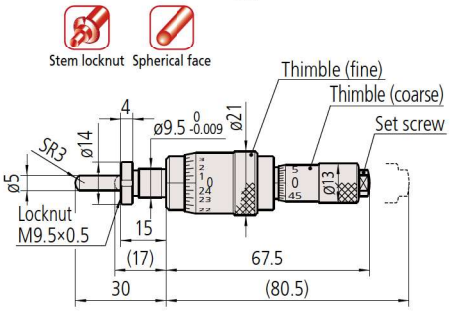

110-502-10 Mass: 95 g

Spherical face

Equipped with vernier scale

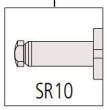

110-107-10
110-108-10 Equipped with vernier scale

( ): with spindle fully retracted.